Installer Summary

1120 gallon Septic tank (minimum)

Tank options: Effluent filter & alarm req'd
Install Jacobson 1650 compartment tank
at 12.69 gpi

533 gallon Dose tank (minimum)

27 GPM @ 19 ft. of head, Pump required
5.7 inch swing on Demand float which translates to roughly 3.9 inches of float tether length
if time dosing is required --> 2.7 minutes ON time & 5.1 hours OFF time
18 inches from bottom of tank to "pump ON" float, or 12 inches to "timer ON" float
21 inches from bottom of tank to "Hi Level Alarm" or 31 inches to "Hi level alarm" if time dosed

45 ft. of 2.0 inch supply line with end feed manifold connection
(Tip: "top feed" manifold to control drainback)

24 inch, or 2.0 ft. Sand Lift Mound
10.0 ft. wide by 37.5 ft. long Rock bed
3 laterals 1.50 inch diameter 35.5 ft. long 3.0 ft. lateral spacing
1/4" inch perfs 3.0 ft. perforation spacing

Yes Effluent filter & alarm
3 clean out & valve box assemblies

36.5 ft.Total sand ABSORPTION width (minimum)
10.4 ft. upslope and sideslope (sand beyond rockbed, minimum)
16.2 ft. Downslope (sand beyond rockbed, minimum)

Specific slope ratios give BERM widths (topsoil beyond rockbed) of:
4:1 upslope ratio 14 ft. upslope berm
4:1 sideslope 18 ft. sideslope berms
4:1 downslope 21 ft. downslope berm

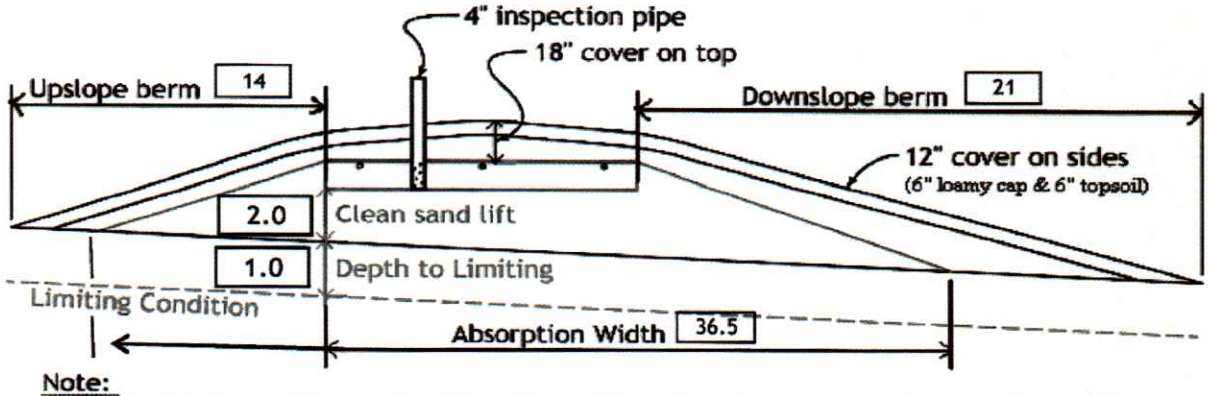

Note:
For 0 to 1% slopes, ***Absorption Width*** is measured from the ***Bed*** equally in both directions.
For slopes >1%, ***Absorption Width*** is measured downhill from the upslope edge of the ***Bed.***

Rock Bed:	17.0	yd^3 or *1.4=	24	ton	9 inches under pipe
Mound Sand:	183	yd^3 or *1.4=	256	ton	calculation based on 3:1/4:1 slope from top of rockbe
Loamy Cap:	64	yd^3 or *1.4=	90	ton	6" deep
Topsoil:	74	yd^3 or *1.4=	104	ton	6" deep